Mercedes-Benz
W166

USER MANUAL

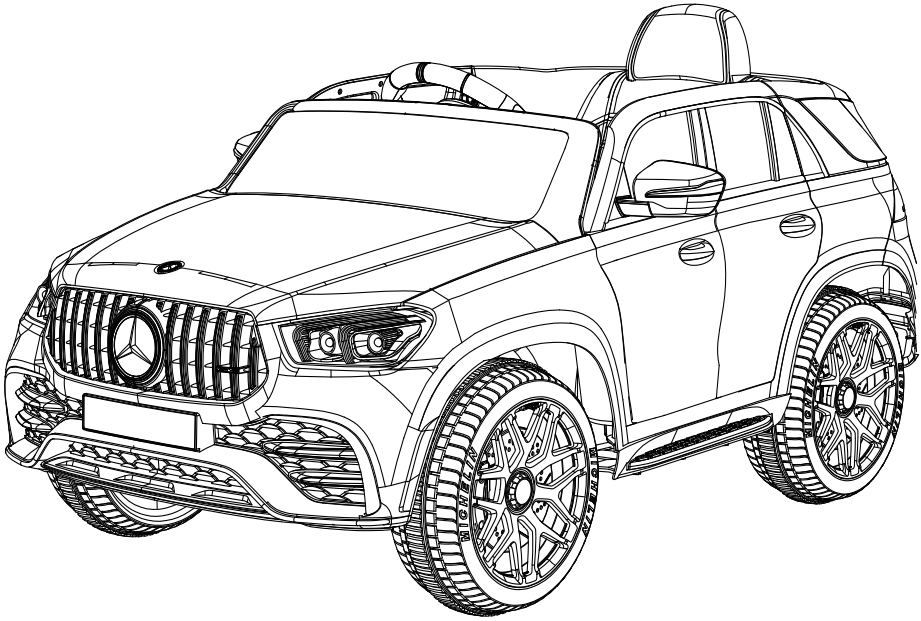

- **For age: 37~96 months**
- **Maximun weight capacity: 25 kg**
- **This product contians small parts that are for adult assembly only.**
- **Ensure charge the battery for 4 hours before first use.**

The vehicle must be assembled by an adult who has read and understood the instructions in this manual.Keep instructions for future reference

LICENSE

“Mercedes-Benz” and ⊕ are the intellectual property of Mercedes-Benz Group AG.They are used by Julong Toys (Jiaxing) Co.,Ltd under license.

COMPANY PROFILE

Julong Toys (Jiaxing) Co.,Ltd is a children's Goods Factory integrating R&D, engineering, production, quality control and sales. The main products are children's electric cars, children's bicycles and other Sproducts. The company has several professional production lines, with annual production capacity reaching hundreds of thousands of vehicles. The company has a professional R&D engineering team, which has been working for many years, with complete testing equipment, to ensure that the quality of products produced by the company fully meets the requirements of national standards.

SPECIFICATIONS

Battery Model :	12V7Ah (or 12V10Ah)
Weight Limit :	25kg
Running Speed :	2-5km/h
Charger Output :	DC 12V1000mA
Age Grading :	37-96 months
Vehicle Size :	1120×710×590mm
Normal Charging Time :	8-12 hours
Fuse :	WHPTC
Motor :	Steering motor :12V 380#6600
	Drive motor :12V 390#16000

•After the regular service of the product, adults should regularly (suggest once two weeks) check the main items, including storage battery, charging device, wires, outer skin, circuit changer and switching valve. Clamp devices should be checked to see whether is loose. When there's hidden danger, the product should be stopped being used until restored.

• The vehicle should be cleaned by slightly wet (no water drop) soft cotton. Also can be polished by non-wax furniture in order to make the surface bright and clean. Do not use chemical dissolvent to wipe the plastic part of the toy to avoid being dissolved. The car cannot be cleaned by soap and water since water will damage the motor and storage battery, causing short pass of the electro-circuit system.

• After using for a period of time, please use lubricating oil to lubricate the iron part in order not to get rusty. The car should be kept away from high temperature and moistness, since the plastic parts might melt. When charging, please keep it away from inflammable materials so that fire will not occur.

• When stop or not using for a long time, please cut off the power. All the circuit changers should be switched to "STOP" or "OFF". The structure and wire system cannot be altered without authorization. Maintenance and replacement of crucial parts should be supervised by professionals.

• In areas where power supply is unstable, installing power regulator is highly recommended to protect the storage battery when recharging do Snot use safety wires not accord with the product.

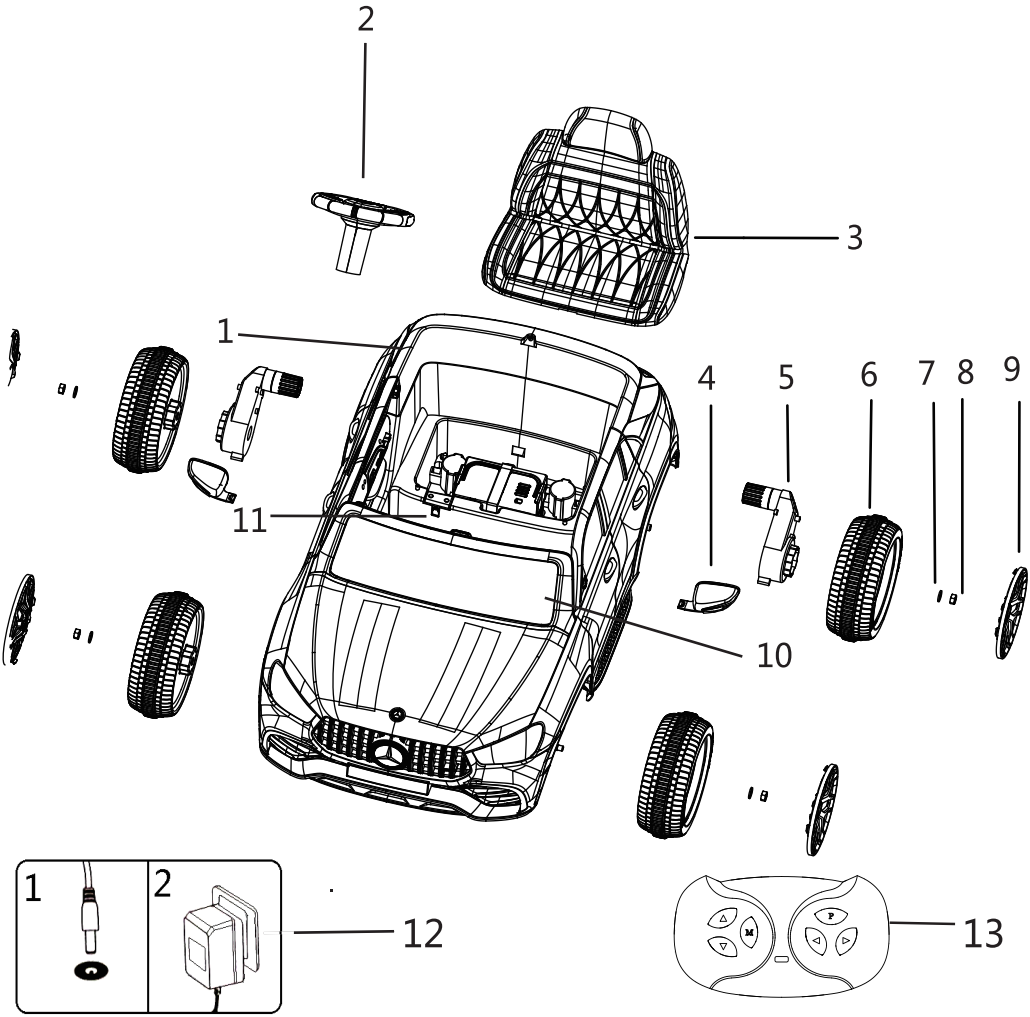

NO	NAME	NO	NAME	NO	NAME
1	Body	6	Wheel	11	Charging hole
2	Steering wheel	7	Shim	12	Charger
3	Seat	8	M10 nut	13	Remote control
4	Rearview mirror	9	Wheels cover	14	
5	Driver motor	10	Wind shield	15	

Ensure all parts indicated in the parts list have been indicated in the box.
We recommend you keep the original packing materials until the unit is fully assembled, to ensure that no parts are discarded.
Assembly of your new vehicle should take approximately 30 minutes.
Adult assembly is required.
WARING:Children can be harmed by small parts,sharp edges and sharp points in the vehicle's unassembled state, or by electrical items.
WARING:CHOKING HAZARD-small parts Not for children.
Tools Required
Phillips Screwdriver(Not included), Pliers (Not included)
Socket Wrench(Included)
Optional: Gear box *2 or Gear box *4

1: Install the rear wheel

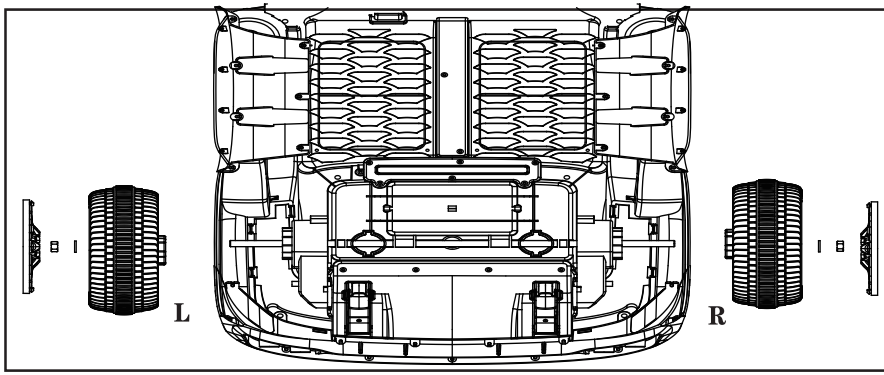

1. Place the car body upside down on a flat surface.
2. Slide the wheel, 10mm shim and M10 nut into the "R" side of the rear axle in turn (Noted: Wheel's bulge needs match the gear box).
3. Repeat on other side.
4. Use Socket Wrench to tighten the nuts at both ends of the shaft in the opposite direction.
5. Attach the wheel cover onto the wheel,pushing firmly until it clicks into place. (Align the buckle when installing)

2: Install the front wheel

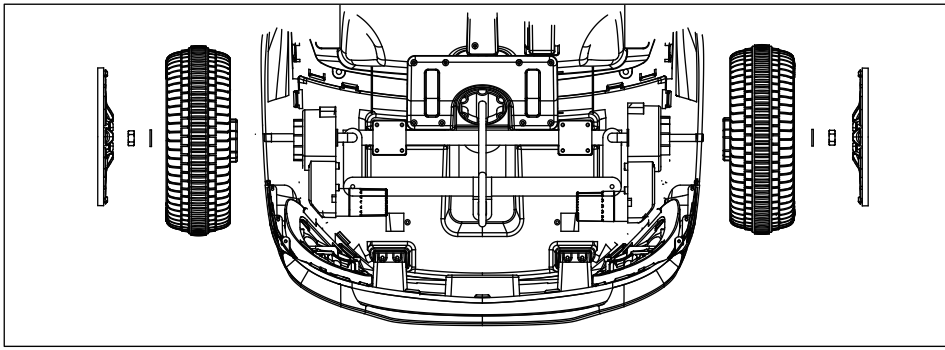

1. Slide 12mm shim ,the wheel, 10mm shim and M10 nut into the "R" side of the front axle in turn（Noted: Wheel's bulge needs match the gear box).
2. Repeat on other side.
3. Use Socket Wrench to tighten the nuts at both ends of the shaft in the opposite direction.
4. Attach the wheel cover onto the wheel,pushing firmly until it clicks into place. (Align the buckle when installing)

3: Install the steering wheel

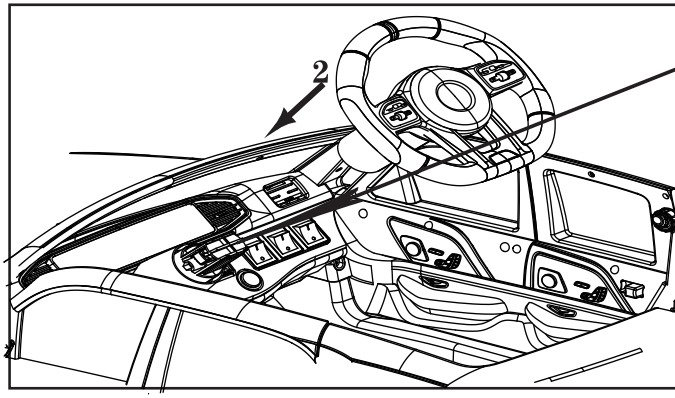

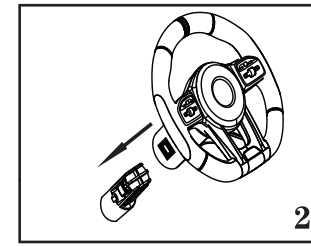

1. Connect the steering wheel interface to the jack on the steering rod's fixed base.
2. Push connected jack and interface into the base .
3. Attach steering wheel into steering rod's fixed base,pushing steering wheel down until it clicks into place.

4: Instal rearview mirror

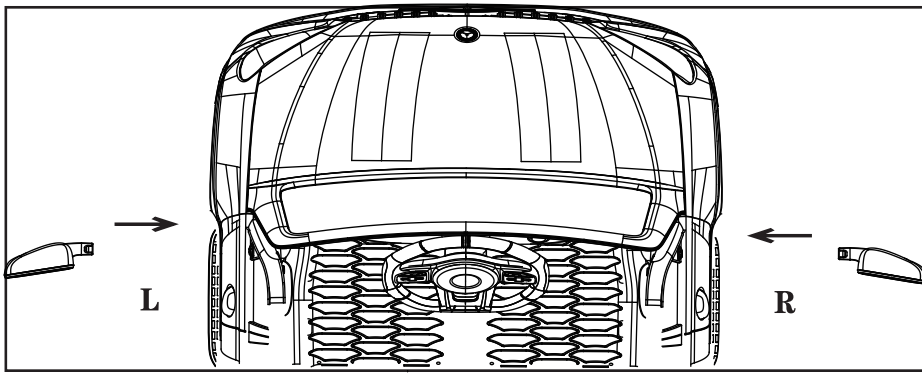

1 Align the Right rearview mirror bayonet with the slot on the window and push it inward until it click into place.

2 Repeat on the other side.

3 Noted: The rearview mirror is different of left and right .

5: Connect the battery and Install seat

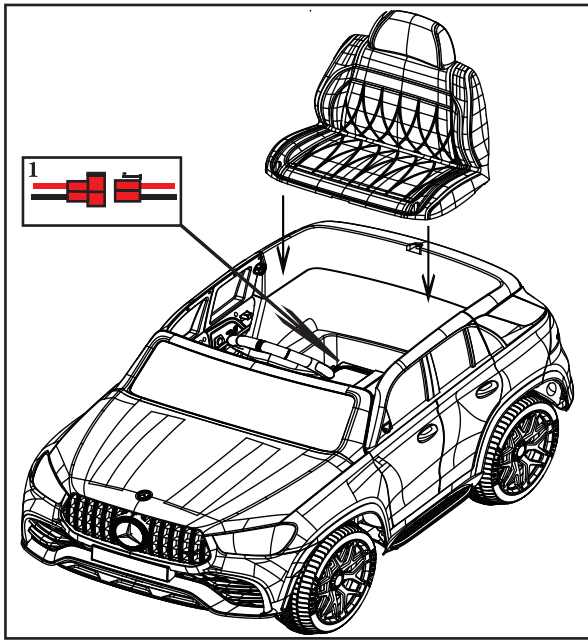

1 Connect the battery interface to the jack. (Figure 1)

2 Put the seat into the cushion groove, and fix and lock it with 4 * 12 mm flat head self tapping.

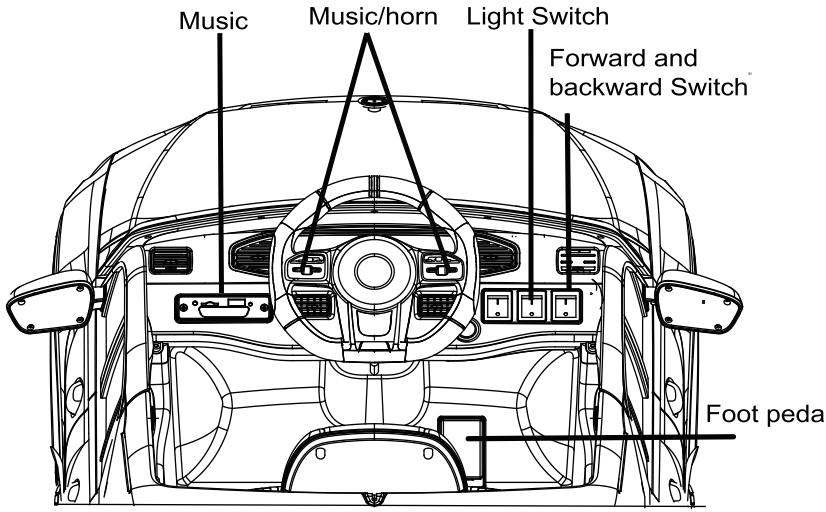

WARNING!

Ensure the vehicle totally stop before changing the forward/backward switch to avoiding gear box's damage.

Operation Instructions

Power:Push the power switch to turn on the car.
Press the power switch again to turn off the car.

Pedal:Press the foot pedal down to go. Release the foot pedal to stop.

Forward/Backward: Push switch up to ⇧ to move forward.Push switch back to ⇩ to move backwards. Push switch to P to park.

Right/Left: Use the steering wheel to turn in directions left or right.

Light Switch: Press the light switch to turn on and off light.

Horn:Push the button on the right for horn sound.

Music :Push the button on the left to switch between music channels.

2/4W Switch:Press the switch to change two-wheel drive or all-wheel drive. (This button is only available in all-wheel-drive.)

Using 2.4G Remote Control

Installing or changing batteries: Push down battery cover located on the of the remote controller to open

Install two AAA batteries matching polarity(+,-)correctly then close cover.

First Use: Pairing Vehicle with Remote control

Hold down Forward Key and Backward Key for 3 seconds.

Speed indicator light flashes .Turn on car power switch on vehicle. The speed indicator goes to long bright light. Matching successful.

If paired incorrectly speed indicator will not light up,turn off car power and repeat steps.

Vehicle must be paired when replacing batteries before using vehicle.

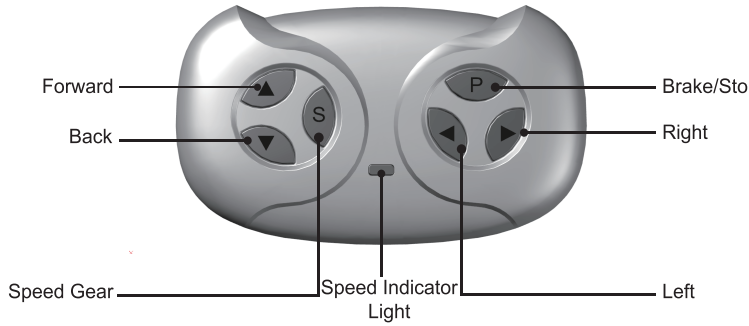

General Use

S Button : Speed Gear Button-Selects 3 different speeds

Low Speed chosen - Speed indicator 1 LED light

Middle Speed chosen - Speed indicator 2 LED light

High Speed chosen - Speed indicator 3 LED light

Tips:Every speed chosen has a slow start.

P Button:will stop the vehicle - Speed indicator flashes.

Forward: Move vehicle in forward motion

Backward: Move vehicle in backward motion

Left:Move vehicle in left direction

Right:Move vehicle in Right direction

Precautions:

- The remote control will only work within 15m range of vehicle.
- The remote control suitable for adult only . Keep out of reach of children.
- Read the manual carefully before operating. Adult must be familiar with operating before kid playing the vehicle.
- The remote control has energy-saving settings. When not in use the remote control will turn off automatically after 15 seconds.
- NEVER use in or near roadways, or water ,or steep ground. Operate on relatively level ground.
- Keep the remote control away from water or other fluids,otherwise it could damage the remote control.
- Do not re-use previous batteries. Change both batteries at the same time.
- Make sure batteries are installed correctly before turning on.
- Take out the batteries from the remote control during long period of non-use.
- Batteries need replace when the remote control works less than 3m range of vehicle.

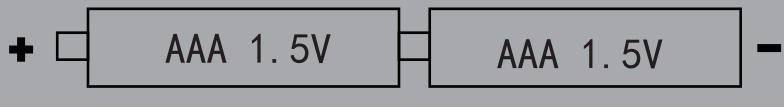

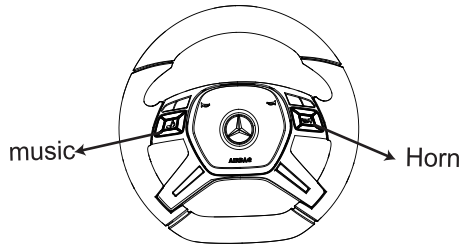

Press the button on the Steering wheel, it will make a sound or play music.

The handle operation

1.Turn off the power when battery runs out.
2.Grasp the handle in the middle of the rear ,lift the vehicle to 45 degrees and drag.
3.No kids when drag the vehicle.
4.Adult operate only.

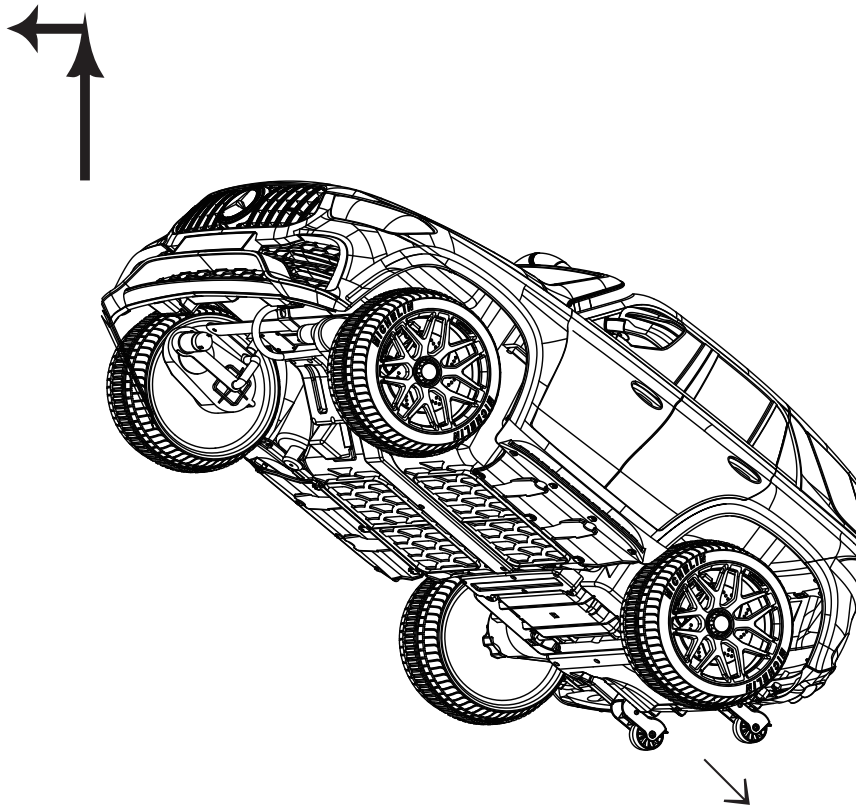

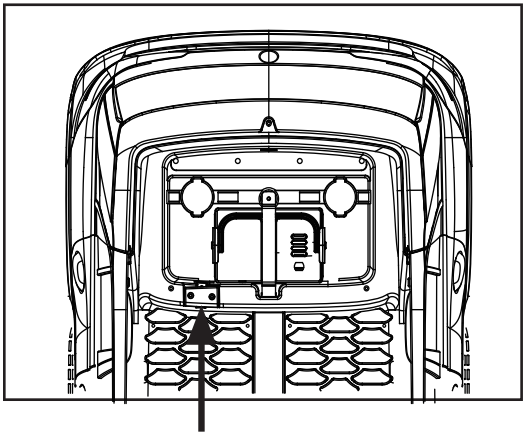

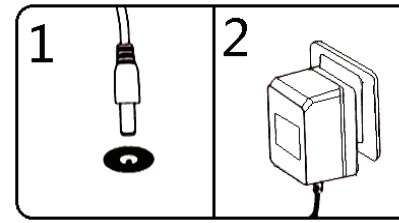

Power must be turned off when charging.

Charging slot is located in the middle of dash board.

Connect the charger plug into charging hole.

Plug the charger to a household outlet.

Charging Precautions

Battery charging MUST be carried out by adults.
When you charge for the first time ,the battery has to be charged for 4 hours. Otherwise the battery would be damaged permanently.
Power must be turned off when charging. NOTED:The car cannot use when charging.
When the battery runs out, please re-charge. General charging time is 8~12 hours.Do not exceed the recommended charging time.
It’s a normal that the battery casing will be a little fever during charging.
Keep the charger plug away from water or other fluids. Or it will make a short circuit.
Before charging, ensure the power supply input complies with the charger input,otherwise don’t use it.
Ensure re-charge the battery at least once a month， even if the vehicle is not in use.
The charger and battery is not a toy. Keep children away from it.

Problem	Possible Cause	Solution
Vehicle does not run	1.Run out of battery 2.Tripped thermal fuse 3.Wheel's nut dropped off 4.Battery connectors were disconnected 5.Dead battery 6. Broken motor	1.Re-charge the battery at least 4 hours 2.set the power switch to the 'off' position, and wait few minutes before operating again 3.screw up the nut 4.connect the battery connectors again 5.replace a new battery 6.replace a new motor
Battery cannot be re-charged	1.Loose connectors 2.The charger doesn't connected. 3.Broken charger) 4.Dead battery	1.plug connectors again 2.Plug the charger to a household outlet again 3.replace a new charger 4.replace a new battery
Short run time(less than 15 minutes)	1.Run out of battery 2.Battery is old and will not accept full charge	1.Re-charge the battery at least 4 hours 2.replace a new battery
Battery makes a sizzling or gurgling noise when charging	It's normal	No action required
Vehicle runs sluggishly	1.Run out of battery 2.Battery is old and will not accept full charge 3.Vehicle is overload 4.Driving conditions too stressful	1. Re-charge the battery at least 4 hours 2.replace a new battery 3.Do not exceed the maximum weight capacity 4..use only generally level ground
Gear box makes a gurgling noise	broken gear box	replace a new gear box
The vehicle runs shak	1.Motor wire was loose. 2.Poor quality motor	1. connect the wire again 2.replace a new motor
Steering wheel does not work	remote control 's batteries ran out	replace two new batteries
Vehicle cannot stop	Electronic element is damaged	return to maintenance point

- The assembly and battery charging must be operated by adult.
- Ensure all parts are installed into place before use.
- Always keep child in view when child is in vehicle. Direct adult supervision is required.
- Do not operate in an unsafe environment such as streets ,roadways, steep inclines,hills,water,swimming pool or other bodies of water.
- Do not operate on the smooth ground such as marbles,glasses.
- Do not operate in dangerous weather conditions such as rain or snow.
- Do not stand on the vehicle. Only sit on the vehicle.
- Do not change any structure , wire or electronic parts.
- Ensure child has fastened by seat belt when use.
- Turn off the power after each use.
- Pull the plug from battery jack during long period of non-use.
- The charger should be examined regularly for damage to the plug, enclosure and other parts. In the event such damage has occurred,the vehicle should be used until it has been repaired.
- This product contains small parts . small parts not for children under 36 months.