Presence detector - Professional Line

HF 360

COM1 - Concealed wiring
EAN 4007841 002800
Article number 002800

high frequency sensor 360°

max. Ø 12 m

2000 W

2000 W max. (LED-ready)

IP20

ideal 2,5 - 3,5 m

indoor sensor

iQ

IQ-mode

Teach

Teach mode

energy saving

5 years

manufacturer's warranty steinel-professional.de/garantie

Function description

Doesn't miss a thing. HF-presence detector Presence Control PRO HF 360 COM1 for indoors, ideal for WCs with toilet cubicles, changing rooms, stairwells, multi-storey car parks, kitchens, installation height up to 3.5 m, for switching light 'ON' and 'OFF', 1 – 12 m reach, reach is electronically adjustable and can be limited in two directions, detection regardless of temperature, HF-sensor technology also detects movement through glass, wood and stud walls.

HF 360

COM1 - Concealed wiring
EAN 4007841 002800
Article number 002800

Technical specifications

Type	Presence detector
Dimensions (L x W x H)	56 x 120 x 120 mm
Mains power supply	230 V / 50 – 60 Hz
Sensor Technology	High frequency
Application, place	Indoors
Installation site	ceiling
Installation	Concealed wiring
Mounting height	2,50 – 3,50 m
Reach, radial	Ø 12 m (113 m^2)
Reach, tangential	Ø 12 m (113 m^2)
Reach, detail	1 or 2 detection directions can be masked out by stickers for adjustment to the room situation.
HF-system	5,8 GHz
Detection angle	360 °
Angle of aperture	140 °
Optimum mounting height	2,8 m
Mechanical scalability	No
Sneak-by guard	Yes
Capability of masking out individual segments	Yes
Electronic scalability	Yes
Detection	also through glass, wood and stud walls
Twilight setting TEACH	Yes
Twilight setting	10 – 1000 lx
Time setting	30 s – 30 Min.
Output	2000 W
Fluorescent lamps, electronic ballast	1500 W
Fluorescent lamps, uncorrected	1000 VA
Fluorescent lamps, series-corrected	1000 VA
Fluorescent lamps, parallel-corrected	1000 VA
Switching output 1, low-voltage halogen lamps	2000 VA
LED lamps	100 W
LED lamps > 2 W	300 W
LED lamps > 8 W	600 W
Capacitive load in µF	176 µF
Constant-lighting control	No
Basic light level function	No
Functions	Normal / test mode, Semi-/fully automatic, Pushbutton / switch mode, Manual ON / ON-OFF
Settings via	Remote control, DIP switches, Potentiometers, Smart Remote
With remote control	No
Interconnection	Yes
Type of interconnection	Master/master, Master/slave
IP-rating	IP20
Material	Plastic
Ambient temperature	-25 – 55 °C
Application, room	function room / ancillary room, kitchenette, stairwell, WC / washroom, Indoors
Colour	white
Colour, RAL	9010
Manufacturer's Warranty	5 years
Version	COM1 - Concealed wiring
PU1, EAN	4007841002800
Technology, sensors	High frequency, Light sensor

Accessories

EAN 4007841 000363	Surface-mounted adapter Control Pro IP54
EAN 4007841 003036	Control PRO guard cage
EAN 4007841 009151	Remote control Smart Remote
EAN 4007841 006600	HF-ceiling adapter
EAN 4007841 559410	Service remote control RC8

HF 360

COM1 - Concealed wiring
EAN 4007841 002800
Article number 002800

Detection Zone

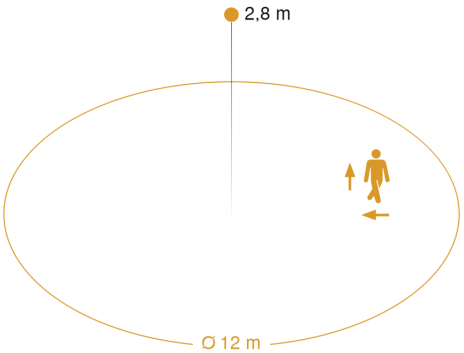

Mögliche Montagehöhe: 2,50 m – 3,50 m
Orange: radial und tangential

Dimension Drawing

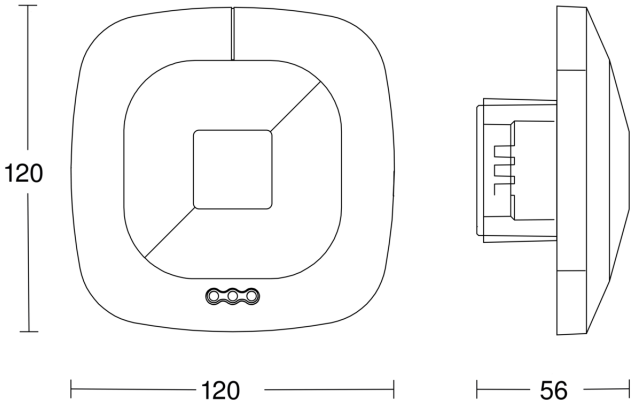

Master circuit diagram

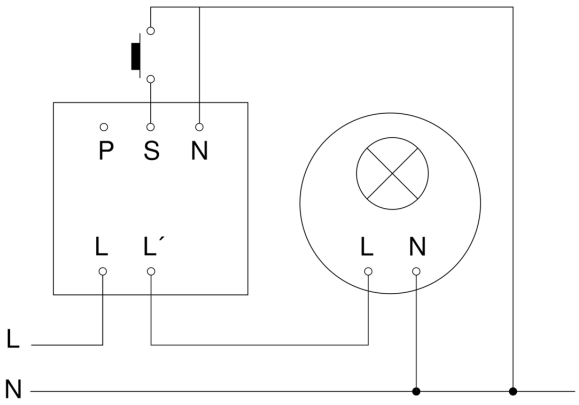

HF 360

COM1 - Concealed wiring
EAN 4007841 002800
Article number 002800

Master/master interconnection circuit diagram

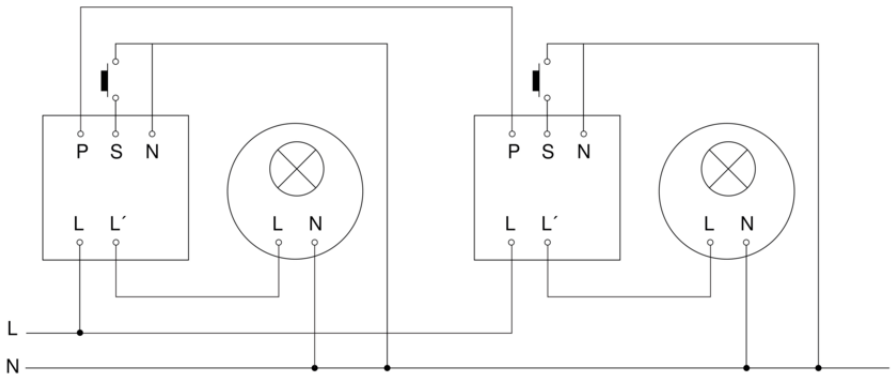
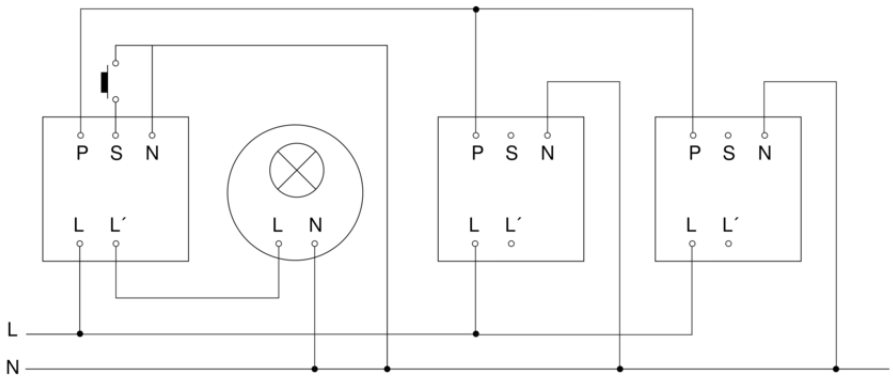
Master/slave interconnection circuit diagram